SIEMENS

Data sheet 5SY4605-8CV



MCB Icu=15KA 400V 3P+N D0.5

General technical data	
number of poles	4
design of pole	3+N
tripping characteristic class	D
mechanical service life (operating cycles) typical	10 000
overvoltage category	3
degree of pollution	3
Voltage	
type of voltage of the operating voltage	AC
insulation voltage (Ui)	
• with multi-phase operation at AC rated value	440 V
• **operational current**	
— **at 40 °C rated value**	0.46 A
— at 50 °C rated value	0.42 A
— at 55 °C rated value	0.4 A
• **operational current at AC rated value**	0.5 A
Supply voltage	
supply voltage	
• at AC	400 V
• at DC rated value	60 V
operating voltage at DC rated value maximum	72 V
supply voltage frequency rated value	50/60 Hz
Protection class	
protection class IP	IP20, with connected conductors
Breaking Capacity	
switching capacity current	
• according to EN 60898 rated value	10 kA
• according to IEC 60947-2 rated value	15 kA
Dissipation	
power loss [W] for rated value of the current at AC in hot operating state per pole	1.1 W
suitability for operation	Infrastructure / Industry
Product details	
product feature touch protection	Yes
product component	
• combined terminal top	Yes
• combined terminal bottom	Yes
• neutral conductor switching	Yes

Subject to change without notice
© Copyright Siemens

product feature properties for main switches in accordance with EN 60204-1	Yes
product feature halogen-free	Yes
product feature sealable	Yes
product feature silicon-free	Yes
product extension installable supplementary devices	Yes
Connections	
connectable conductor cross-section solid	
• minimum	0.75 mm²
• maximum	35 mm²
connectable conductor cross-section stranded	
• minimum	0.75 mm²
• maximum	35 mm²
connectable conductor cross-section finely stranded with core end processing	
• minimum	0.75 mm²
• maximum	25 mm²
tightening torque [lbf·in] with screw-type terminals	
• minimum	22 lbf·in
• maximum	31 lbf·in
tightening torque with screw-type terminals	
• minimum	2.5 N·m
• maximum	3.5 N·m
position of power supply cord	Any
Mechanical Design	
height	90 mm
width	72 mm
depth	76 mm
installation depth	70 mm
number of modular width units	4
fastening method	DIN rail
mounting position	any
Net Weight	636 g
Environmental conditions	
influence of the surrounding temperature	max. 95% RH up to 55°C
standard	IEC / EN 60898-1, IEC / EN 60947-2 / UL1077
vibration resistance according to IEC 60068-2-6	±1mm at 5 to 25 Hz; 50 m/s² at 25 to 150 Hz and 60 m/s² at 35 Hz (4 sec)
ambient temperature during operation	
• minimum	-25 °C
• maximum	55 °C
ambient temperature during storage	
• minimum	-40 °C
• maximum	75 °C
number of test cycles for environmental testing according to IEC 60068-2-30	28

Approvals Certificates

Environment			General Product Approval		
EPD	Environmental Confirmations	Environmental Confirmations	CCC	Confirmation	UKCA

General Product Approval			Maritime application	other	
CE EG-Konf.	Miscellaneous	EAC	CCS (China Classification Society)	产品合格 QC PASS	Confirmation

Subject to change without notice
© Copyright Siemens

Railway

Confirmation

Further information

Information on the packaging
https://support.industry.siemens.com/cs/ww/en/view/109813875
Information for data generation and storage
https://support.industry.siemens.com/cs/ww/en/view/109995012
Information- and Downloadcenter (Catalogs, Brochures,…)
https://www.siemens.com/lowvoltage/catalogs
Industry Mall (Online ordering system)
https://mall.industry.siemens.com/mall/en/en/Catalog/product?mlfb=5SY4605-8CV
Service&Support (Manuals, Certificates, Characteristics, FAQs,...)
https://support.industry.siemens.com/cs/ww/en/ps/5SY4605-8CV
Image database (product images, 2D dimension drawings, 3D models, device circuit diagrams, ...)
https://www.automation.siemens.com/bilddb/cax_en.aspx?mlfb=5SY4605-8CV
CAx-Online-Generator
https://www.siemens.com/cax
Tender specifications
https://www.siemens.com/specifications
Characteristic curves
https://curves.simaris.siemens.com/curves/<mmp_prod_noCOMP="HAUPT"></mmp_prod__no>

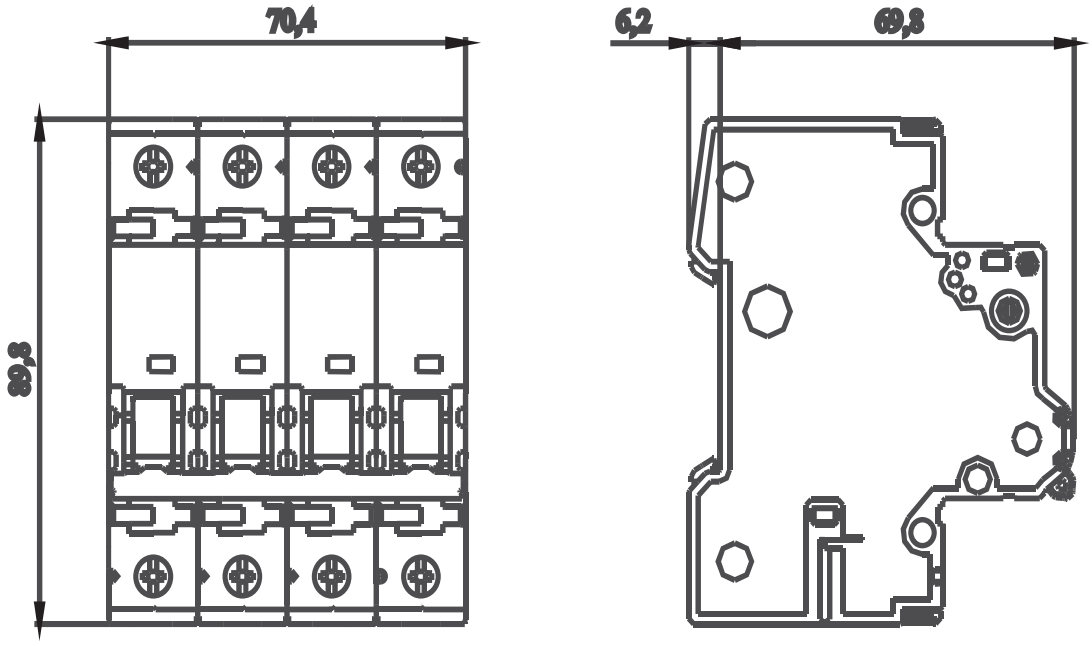

© Copyright Siemens

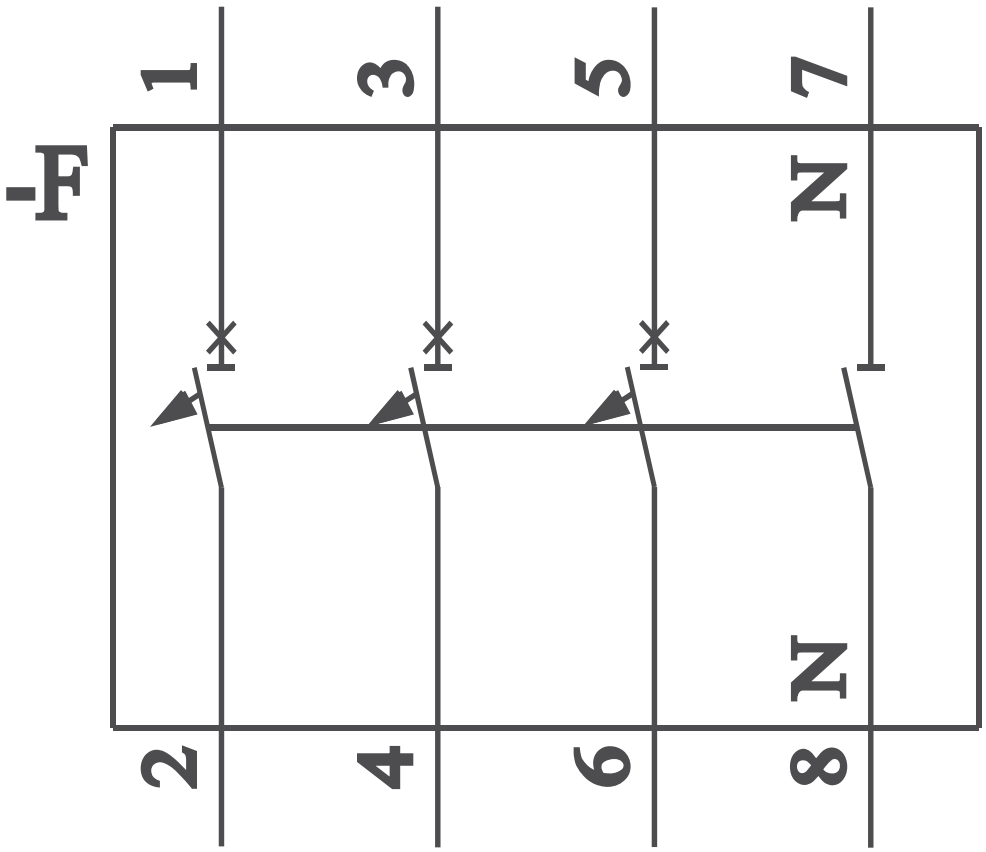

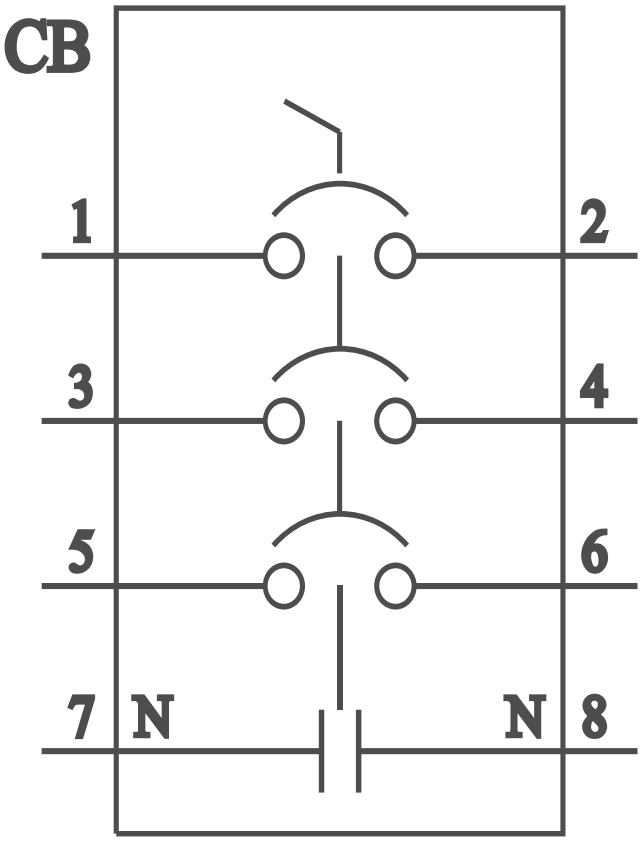

last modified: 8/6/2025

Subject to change without notice
© Copyright Siemens

Subject to change without notice
© Copyright Siemens